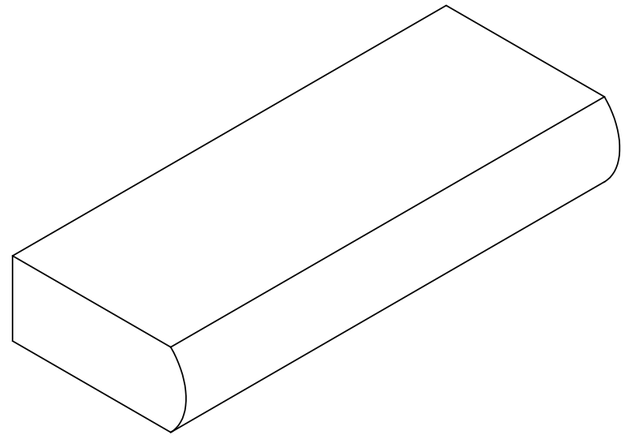

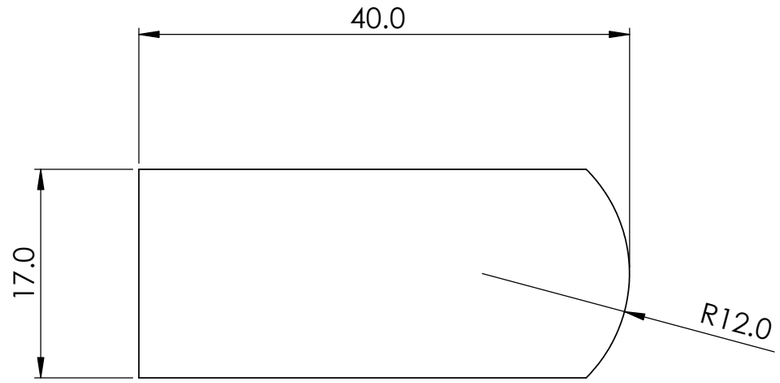

BBS Timbers Ltd	BBS Timbers Ltd www.bbstimbers.co.nz COPYRIGHT 2019	DRAWN BY: BJT DATE: CHECKED:		SCALE: 2:1	SHEET: 1 OF 1	PART NAME: **BBS12** PART NUMBER: **BBS12 Scriber 40x17**