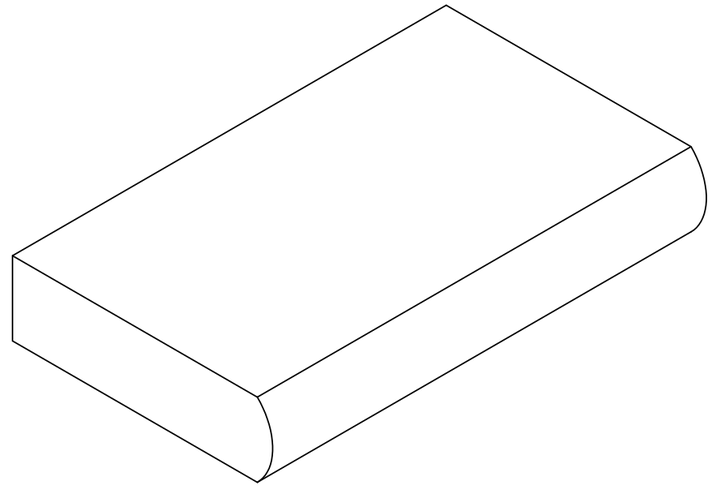

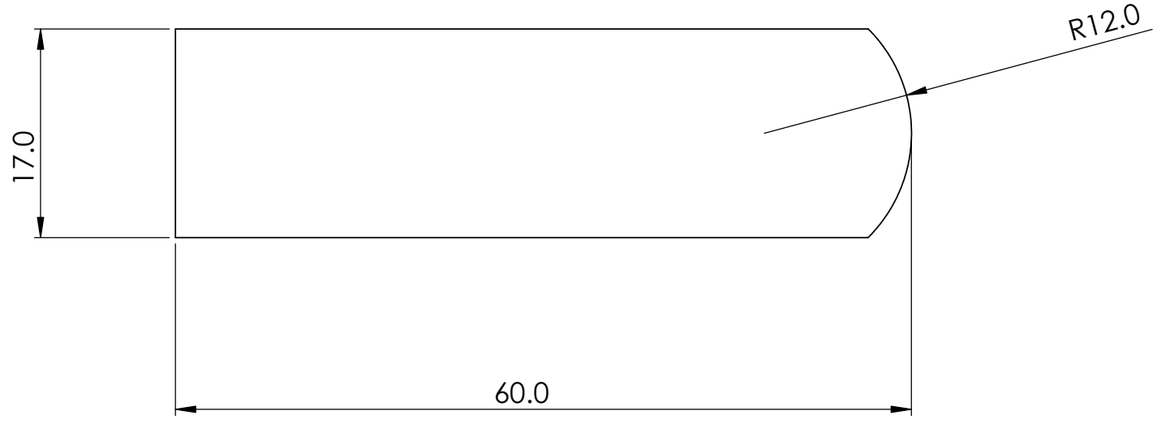

BBS Timbers Ltd	BBS Timbers Ltd www.bbstimbers.co.nz COPY RIGHT 2019	DRAWN BY: BJT DATE: CHECKED:		SCALE: 1:1	SHEET: 1 OF 1	PART NAME: **BBS11** PART NUMBER: **BBS11 Scriber 60x17**